Spinning Fidget Duck Toy

Andrea Lan
ME 1670 Section K, Spring 2026
16 April 2026

Introduction and Project Description

The main objective of this project was to demonstrate the design process by applying design for assembly considerations and implementing tolerances between designed and physical parts on a commercial EOS Formiga P110 SLS printer. To achieve this goal, I designed the *Spinning Fidget Duck Toy*, a mechanical desk accessory that uses a system of two interlocking gears to create a satisfying and repetitive rotational motion. The assembly consists of a driving gear with a handle, a driven gear topped with a duck figurine, and a base plate that houses the components. By rotating the handle, the driving gear rotates the driven gear, spinning the duck figurine.

I selected a gear-based mechanism to study how specific gear parameters including gear ratio and pitch diameter influence rotational speed and the direction of motion between interlocking parts. Beyond the mechanical components, I chose to include a duck figurine to challenge my ability to model organic shapes in CAD. The design choice leverages the capabilities of the SLS printer, which uses a powder bed to support the model during the build process. Unlike FDM printers which require extensive support structures for overhangs, SLS printing allows for high geometric complexity and a more uniform surface finish to support organic features.

The success of the *Spinning Fidget Duck Toy* is defined by its mechanical functionality and accuracy of fitted parts. First, the assembly needs to incorporate appropriate tolerances between the gear teeth and between the gear bore and shaft. These clearances are essential for ensuring smooth power transfer and preventing binding or "wobbly" movement during rotation. Second, the design needs to have an optimal gear ratio through the selection of tooth count and pitch diameter, ensuring the system operates with enough torque to spin the figurine without excessive resistance. Finally, the figurine needs to be capable of a full 360-degree rotation in both clockwise and counter-clockwise directions, driven by an easy-to-maneuver handle. Meeting these criteria will demonstrate that the CAD model has successfully accounted for the variability of the manufacturing process.

The *Spinning Fidget Duck Toy* utilized two custom-designed gears, which allowed for full control over gear parameters tailored to achieve the most optimal design. A primary design feature was the selection of a low diametrical pitch (DP), defined by the relationship,

$$DP = \frac{N}{P}$$

where N is the number of teeth and P is the pitch diameter. By opting for a lower DP, I designed larger and fewer teeth to ensure the assembly was less prone to snapping during use. To ensure proper mesh, I used an identical DP for both the driving gear and driven gear.

The second key feature was the gear ratio, which was optimized for the 3in x 3in base plate constraint. By selecting pitch diameters of approximately 1in and 2in for the driving gear and driven gear respectively, I implemented a 2:1 gear reduction.

$$Gear\ Ratio\ =\ \frac{N_{driven}}{N_{driver}}$$

This reduction was chosen to prioritize torque over speed, resulting in more mechanical resistance that enhanced the controlled motion of the assembly and felt more satisfying. The reduction also ensured that the figurine remained clearly visible during rotation. Furthermore, the duck figurine itself was modelled with a hollow internal geometry. This feature was necessary to maintain in order to ensure the wall thickness did not exceed SLS manufacturability constraints. Fig. 1 shows the initial assembly sketch submitted in the project proposal.

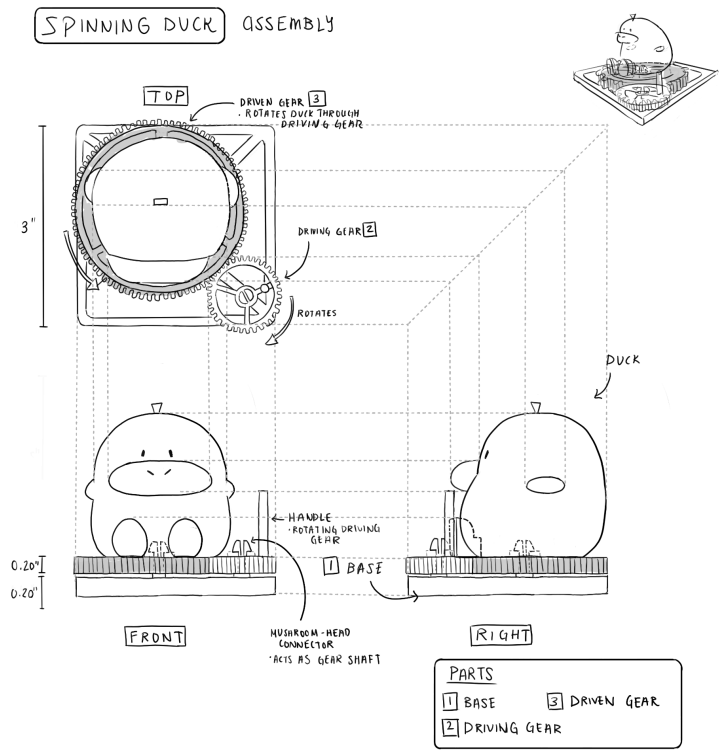

Fig. 1*:* Initial Assembly Sketch

Design for Manufacturing Considerations

Base Plate

- Extrusion: Base, Connector Body, Connector Head
- Extruded Cut: Connector Gap, Connector Head
- Fillet: Base
- Chamfer: Connector Head

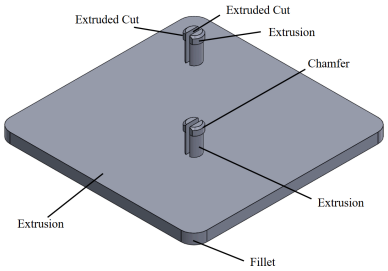

Fig. 2: Base Plate Features

Driving Gear

- Extrusion: Gear Body, Gear Teeth, Handle
- Extruded Cut: Gear Bore, Lightening Holes
- Circular Pattern: Gear Teeth

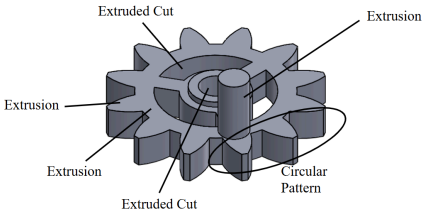

Fig. 3: Driving Gear Features

Driven Gear

- Extrusion: Gear Teeth, Gear Body, Lip, Duck Feet, Duck Eyes, Duck Crest
- Extruded Cut: Gear Bore, Lightening Holes
- Fillet: Between Features
- Circular Pattern: Gear Teeth
- Revolve: Duck Body, Duck Bill, Duck Arm
- Shell: Duck Figurine

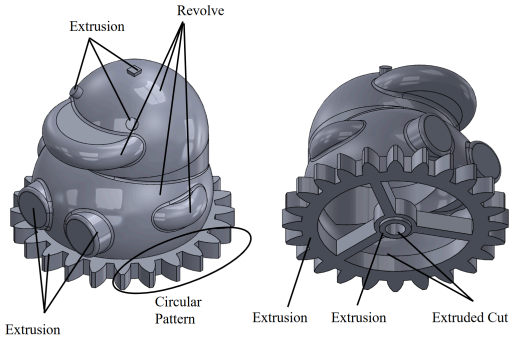

Fig. 4: Driven Gear Features

The primary interlocking feature used in this design is a *mushroom-head snap fit connector* (Fig. 2), which serves a dual purpose as both a structural fastener and a rotational axis (gear shaft). I selected this specific snap fit to prioritize ease of assembly between each gear and the base plate. The connector heads feature a tapered lead-in edge that provides a self-aligning effect, smoothly guiding the gear bore onto the center of the shafts during assembly. The specific dimensions for these connectors were derived from the *Reference 3D Printed Connectors* library provided by the ME 1670 course as a general point of reference.

Commercial Off-The-Shelf (COTS) hardware was intentionally excluded to avoid unnecessary assembly complexity. Specifically, the placement of the duck figurine on top of the driven gear would have obstructed access to the internal fasteners, making the use of threaded bolts or nuts impractical in this configuration. While 3D-printed threads were initially considered to fasten the duck figurine to the driven gear, I opted to consolidate the duck figurine and driven gear into a single part. This decision simplified the assembly process and eliminated the need to include threaded fasteners.

The dimensional specifications for the *Spinning Fidget Duck Toy* were derived from the performance capabilities of the EOS Formiga P110. Following SLS printing guidelines, I utilized a clearance location fit range of 0.008-0.012in and a running and sliding fit range of 0.016-0.020in. To ensure smooth rotation, a 0.012in clearance (total, not gap) was implemented between the gear bore and the connector body serving as the shaft. For the surface between the gears and base plate, no intentional clearance was added as the bottom lip of the gears was designed to sit flush with the base plate.

3D printing considerations were determined by the specific constraints of the SLS printer. Each design feature adhered to a minimum wall thickness of 0.0394in (1mm) and a maximum of 0.236in (6mm) to prevent printing failure. For major structural elements, I followed the recommended wall thickness of 0.0787in (2mm). To comply with these constraints, the duck figurine was modelled to include hollow internal geometry and a constant wall thickness of 0.0787in. To meet the 4in cubic volume limit, I implemented lightening holes within each gear body (Fig. 3 and Fig. 4). These lightening holes also functioned as openings for easy entrance and removal of the powder used for SLS printing. Finally, the base plate dimensions were constrained to 3in x 3in to fit within the designated 3in x 3in x 2in bounding box.

The inspiration for the duck figurine was taken from the popular Pokémon character *Psyduck* [1], specifically capturing its distinct round silhouette and flat bill. To translate Psyduck's organic features into a CAD model, I used a series of revolve operations, allowing for creation of a round profile. For the mechanical components, the gear tooth geometry was referenced using *Gear Generator* [2], an online gear design tool. This reference was useful for defining the general shape of the gear teeth and the approximate DP given a 2:1 gear ratio. The gear teeth were further altered during the CAD assembly process using SolidWorks' evaluation features.

The final CAD design was the result of two major iterations aimed at optimizing material usage and ensuring bounding box constraints were met. In the first iteration (Fig. 5), I hollowed out the base plate to mitigate the risk of exceeding the 4in cubic volume limit since there was no precise way to predict the volume before modeling. Because SolidWorks' provides information on the precise volume of assemblies, I determined after initial modeling that the assembly was well within the limit. As a result of this evaluation, I removed the hollow cutouts in the second iteration (Fig. 6) to increase structural rigidity and aesthetic appearance. A secondary challenge involved the height of the duck figurine, which initially exceeded the 3in x 3in x 2in bounding box constraint (measuring 2.3in x 2.3in x 2.5in). To resolve this issue, I adjusted the height of the figurine down to 2in. This modification ensured the part met the project constraints.

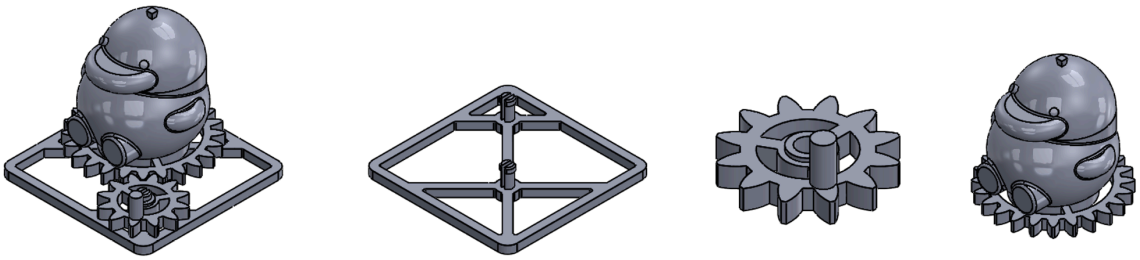

Fig. 5: 1st Design Iteration

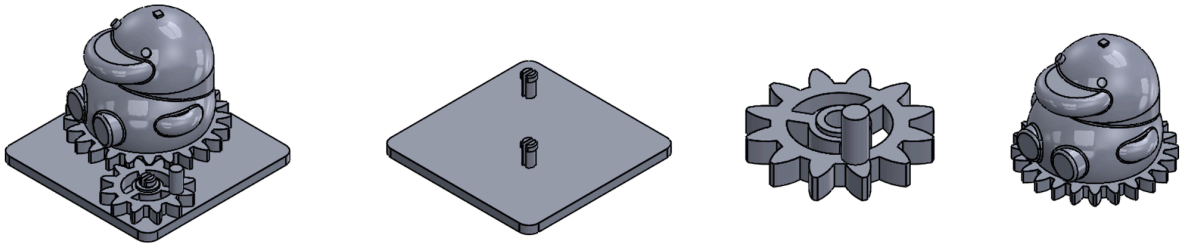

Fig. 6: 2nd Design Iteration

Challenges Faced in Manufacturing

The manufacturing process was successful, with no significant printing failures or difficulties. Due to the high precision of the EOS Formiga P110, all components were manufactured accurately relative to the CAD model. However, the scaling of some part features was underestimated and could be improved. First, the chamfer on the snap-fit connector heads was noticeably undersized from what I intended. The scale was insufficient to provide a discernible self-aligning effect during assembly. Second, the handle on the driving gear, though functional, proved to be too small for optimal grip. These observations highlight the need to consistently check the physical scale during modeling. This could be accomplished by using a ruler as reference.

Similarly, the assembly process was successful, confirming that the initial clearances effectively prevented part interference. However, post-assembly testing revealed two functional discrepancies. First, the gears had a "wobbly" motion and failed to remain flush with the base plate during rotation. The instability was likely attributed to insufficient surface contact between the gear lip and the base plate, allowing the gears to easily tip onto the side where force was being applied from the handle. Second, the mechanical interlock of the snap-fit connectors was weaker than intended. While designed for permanent attachment, the gears could be detached from the base plate with minimal force, suggesting the overlap between the gear bore and connector head was insufficient to create a secure lock-in-place mechanism.

To resolve the identified performance issues, two primary adjustments are proposed for future iterations. First, to prevent unintended disassembly, the diameter of the mushroom head relative to the gear bore should be increased. The connector gap should also be increased to compensate for the increased diameter. This modification would increase the force required to pinch the connector gap to release the gears, leading to a more secure and permanent mechanical lock once assembled. Second, the "wobbly" motion during rotation can be fixed by enlarging the lip at the base of the gear. Expanding the feature increases the surface contact area with the base plate, providing greater stability and resistance to tilting motion. This increased contact area would also stabilize the gear's rotation, allowing it to remain flush with the base plate.

My design and manufacturing process could be made more efficient by establishing predetermined tolerances prior to modeling. Making the distinction between tight fits and mechanically active clearances could have prevented the time-intensive, iterative adjustments required to resolve late-stage assembly interferences. When I was modeling, I only began to include tolerances once all my parts were placed in the CAD assembly. Furthermore, working with one system of units would have greatly reduced modeling time. My transition between inches for part features and millimeters for tolerance specifications was inefficient and occasionally led to unit mix-ups. In addition to the previous suggestions, utilizing mass properties and physical dynamics tools in SolidWorks' throughout the modeling process would also improve the design workflow by allowing for identification of mechanical errors and interferences.

The distinction between nominal dimensions and actual part dimensions is essential for manufacturing. While nominal dimensions are necessary to establish standard part dimensions, they do not account for variability of manufacturing processes found in the real world. This was evident when conducting a tolerance analysis, where actual part dimensions varied from CAD dimensions. Therefore, future designs should specify tolerance specifications to account for this variability.

Tolerance Analysis

Feature	**Dimensions in CAD (in)**	**Actual Measured on 3D Part (in)**	**% Difference**
Base Plate Length	3.000	2.980	0.67%
Base Plate Width	3.000	2.955	1.51%
Base Plate Height	0.157	0.163	3.75%
Connector Body Diameter	0.200	0.193	3.56%
Connector Head Diameter	0.240	0.235	2.11%
Connector Gap	0.060	0.058	3.39%
Driven Gear Diameter	2.400	2.398	0.08%
Driven Gear Tooth Width	0.180	0.177	1.68%
Driven Gear Bore Diameter	0.217	0.215	0.93%
Driving Gear Diameter	1.380	1.398	1.30%
Driving Gear Tooth Width	0.180	0.173	3.97%
Driving Gear Bore Diameter	0.217	0.212	2.33%
Driving Gear Handle Diameter	0.200	0.199	0.50%
Duck Crest Length	0.110	0.104	5.61%
Duck Eye Diameter	0.125	0.122	2.43%
Duck Foot Diameter	0.500	0.385	3.05%

Fig. 7: Final Design's Dimensions

Discussion & Analysis

Overall, the EOS Formiga P110 demonstrated high precision, with recorded deviations between CAD dimensions and actual part dimensions ranging from 0.08% to 5.61% . A consistent trend was observed where the actual part dimensions were smaller than the CAD dimensions. This observation could be due to the 3D printing material and manufacturing processes associated with it. 3D printed parts have a tendency to shrink. Fig. 7 shows sixteen key part dimensions that focus on critical features such as impact fit and function.

The table shows that smaller features are more sensitive to variations between nominal versus actual part dimensions. For example, the 0.110in duck crest had a 5.61% difference and the 0.060in connector gap had a 3.39% difference. Compared to the 1-2% difference measured in many larger features, the % difference in smaller features tends to be higher. This indicates that while differences in dimensions for smaller parts may be small, the impact of these differences is magnified by their small geometries, requiring more intensive tolerancing specifications to ensure part fit.

Material shrinking directly influenced the assembly's mechanical performance. The connector gap, which was critical for the deflection of the snap-fit, shrunk by 3.39%. While the initial tolerancing was sufficient to allow assembly, a smaller gap size could have restricted the inward deflection required to clear the gear bore. Furthermore, shrinkage rates between the connector body (3.56%) and the gear bore (0.93%) effectively increased the resultant clearance beyond the intended 0.012in, possibly contributing to the "wobbly" motion during post-assembly testing. While this did not compromise the functionality of the assembly, it is important to take note that future designs should adjust tolerances based on the tendency for certain part features or materials to shrink or expand to compensate for the differences between CAD dimensions and actual part dimensions.

Conclusions

The development of the *Spinning Fidget Duck Toy* reinforced the idea that engineering design is fundamentally an iterative process. This project highlighted the necessity of following good parametric modeling practices to ensure that CAD models are fluid and adaptable between iterations. This became evident when I moved onto my second design iteration, where the ability for the model to be adaptable was dependent on pre-established dimensions and relations between part sketches and features. While my overall concept design remained consistent throughout the project, attention to all components of the design process including printing specifications and tolerances played an integral role in contributing to the success of the assembly. Future modifications could address and refine flaws in the design to improve overall functionality and performance.

Fig. 8: Fully Assembled Project

ITEM NO.	PART NUMBER	DESCRIPTION	QTY.
1	Lan_Andrea_Base_1	Base Plate	1
2	Lan_Andrea_DrivenGear_1	Driven Gear	1
3	Lan_Andrea_DrivingGear_1	Driving Gear	1

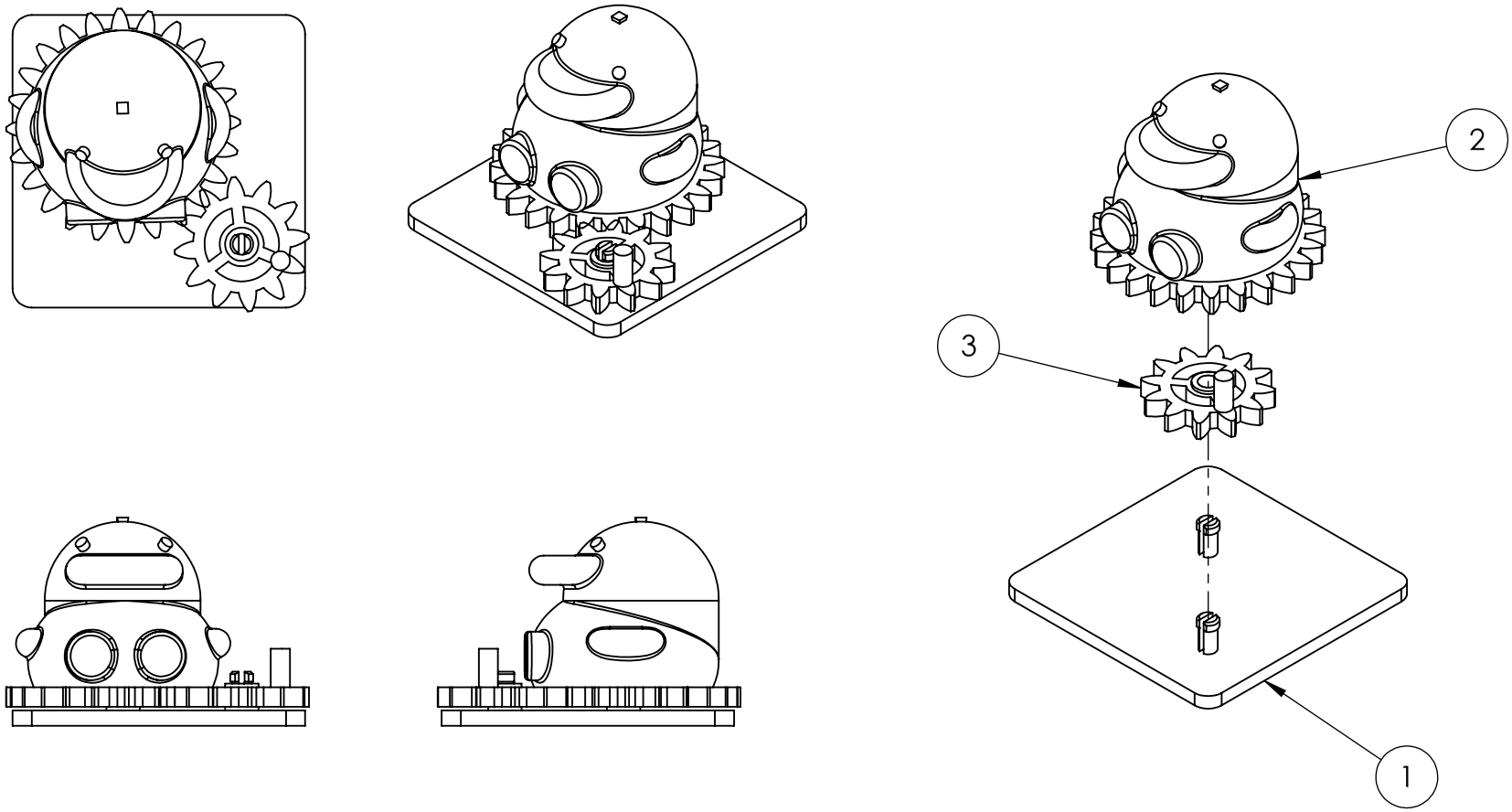

Georgia Institute of Technology

TITLE	DATE	NAME
SPINNING DUCK ASSEMBLY	4/13/2026	ANDREA LAN

COURSE	SEMESTER	SECTION	LAB	ACTIVITY	DIMENSIONS ARE IN INCHES ANGLES ARE IN DEGREES	SIZE
ME 1670	SPRING 2026	K			SCALE 1:1.8 SHEET 1 OF 1	A

5 4 3 2 1

SOLIDWORKS Educational Product. For Instructional Use Only.

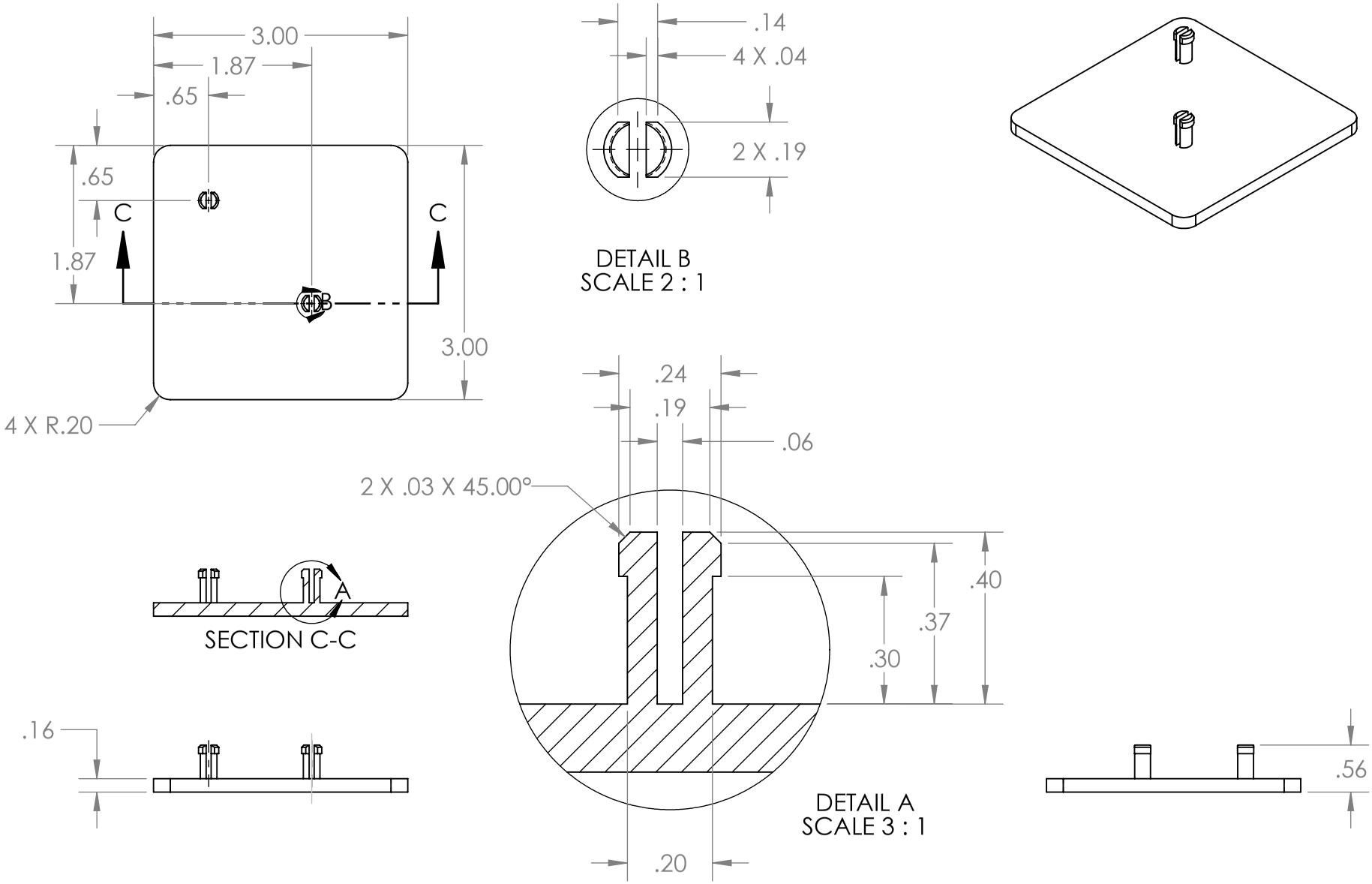

Georgia Institute of Technology	TITLE **BASE PLATE**		DATE **4/13/2026**	NAME **ANDREA LAN**			
	COURSE **ME 1670**	SEMESTER **SPRING 2026**	SECTION **K**	LAB	ACTIVITY	DIMENSIONS ARE IN INCHES ANGLES ARE IN DEGREES SCALE 1:1.7 SHEET 1 OF 1	SIZE **A**

5 4 3 2 1

SOLIDWORKS Educational Product. For Instructional Use Only.

GEAR SPECIFICATIONS:
1. NO. TEETH: 12
2. BORE DIAMETER: 0.217 IN
3. BORE DIAMETER CENTERED
4. LIGHTENING HOLES 120° APART

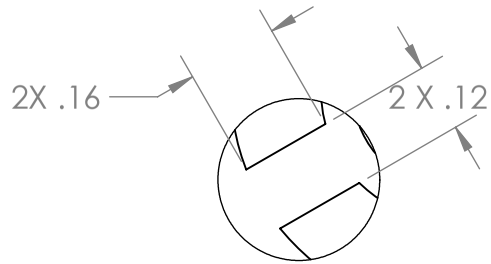

DETAIL D
SCALE 3 : 1

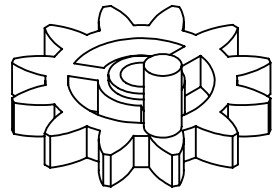

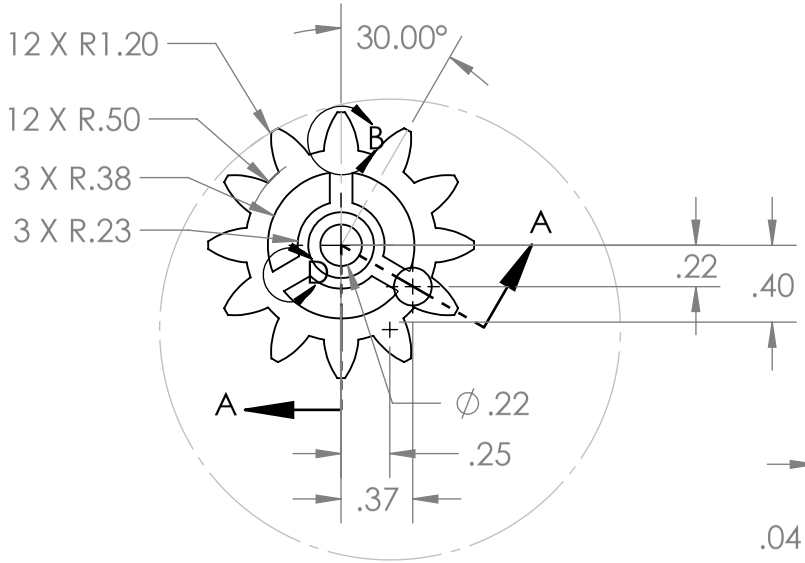

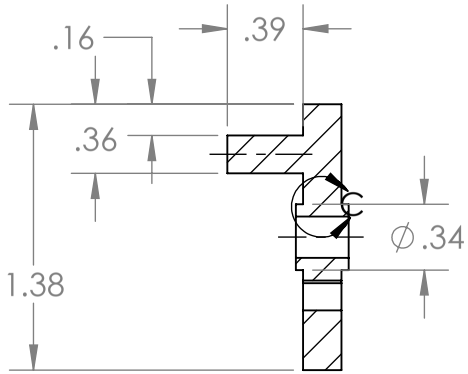

SECTION A-A

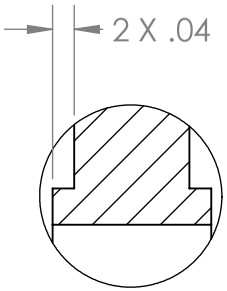

DETAIL C
SCALE 3 : 1

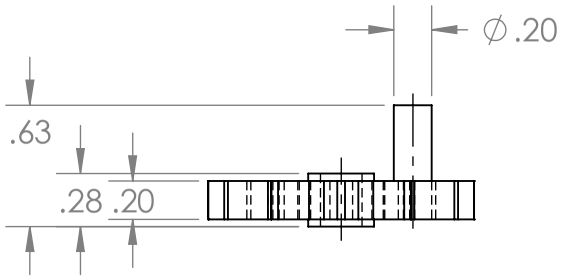

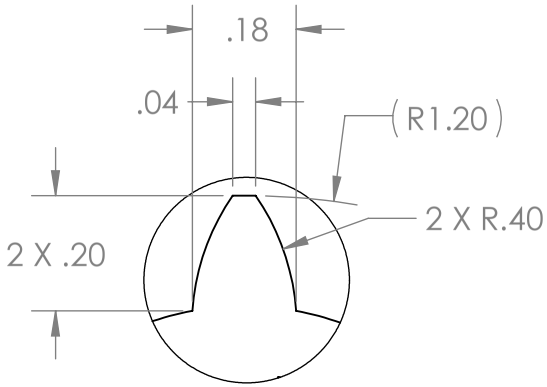

DETAIL B
SCALE 3 : 1

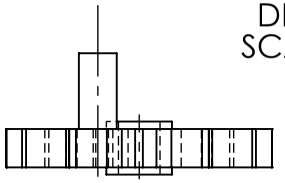

Georgia Institute of Technology	TITLE: DRIVING GEAR		DATE: 4/13/2026	NAME: ANDREA LAN			
	COURSE: ME 1670	SEMESTER: SPRING 2026	SECTION: K	LAB	ACTIVITY	DIMENSIONS ARE IN INCHES ANGLES ARE IN DEGREES	SIZE: A
						SCALE 1:1 / SHEET 1 OF 1	

5 4 3 2 1

SOLIDWORKS Educational Product. For Instructional Use Only.

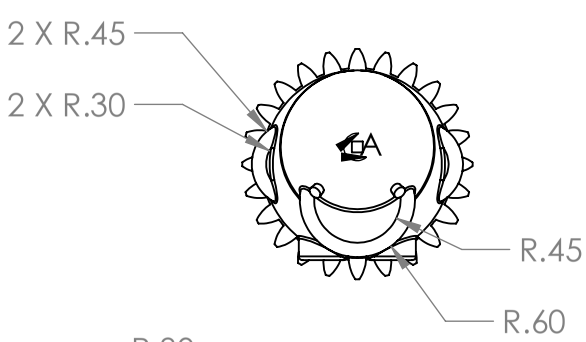

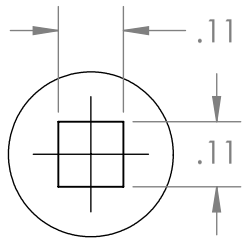

DETAIL A
SCALE 3 : 1

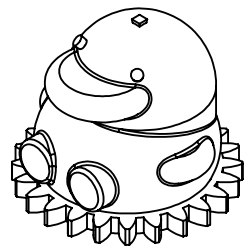

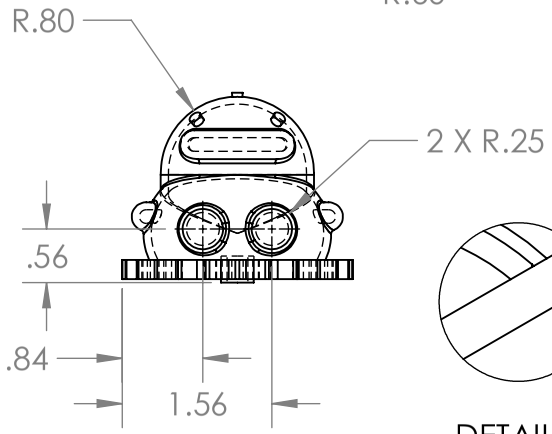

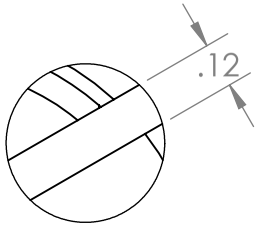

DETAIL C
SCALE 2 : 1

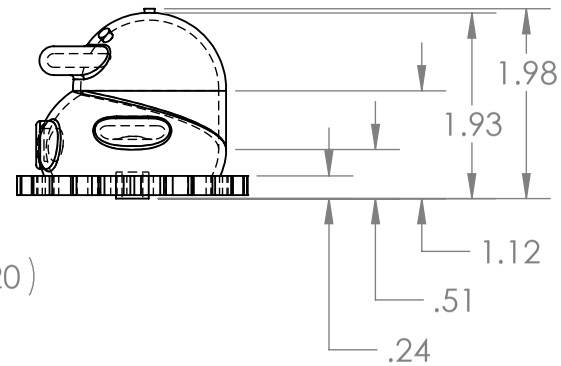

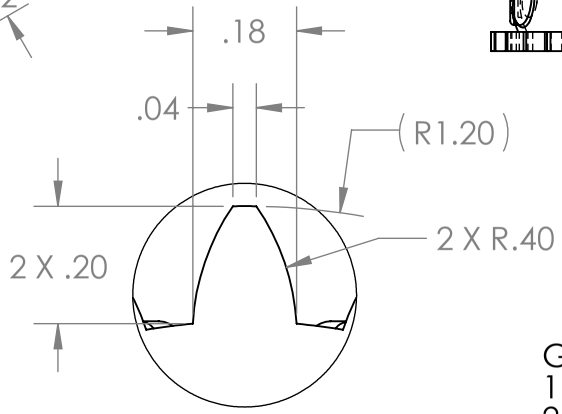

DETAIL B
SCALE 3 : 1

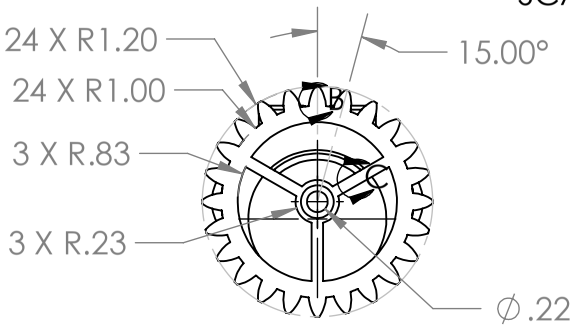

GEAR SPECIFICATIONS:
1. NO. TEETH: 24
2. BORE DIAMETER: 0.217 IN
3. BORE DIAMETER CENTERED
4. LIGHTENING HOLES 120° APART

FILLET RADIUS 0.039 IN
UNLESS OTHERWISE SPECIFIED

Georgia Institute of Technology	TITLE **DRIVEN GEAR MULTIVIEWS**		DATE **4/13/2026**	NAME **ANDREA LAN**			
	COURSE **ME 1670**	SEMESTER **SPRING 2026**	SECTION **K**	LAB	ACTIVITY	DIMENSIONS ARE IN INCHES ANGLES ARE IN DEGREES SCALE 1:2 SHEET 1 OF 1	SIZE **A**

5 4 3 2 1

SOLIDWORKS Educational Product. For Instructional Use Only.

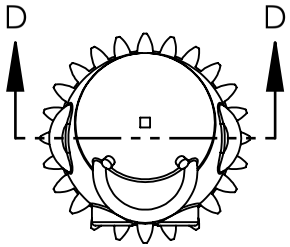

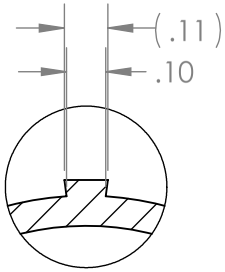

DETAIL B
SCALE 2 : 1

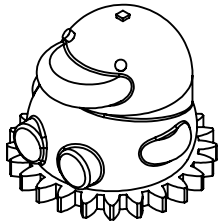

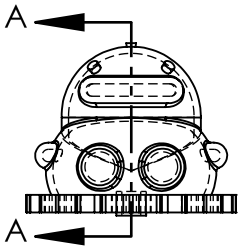

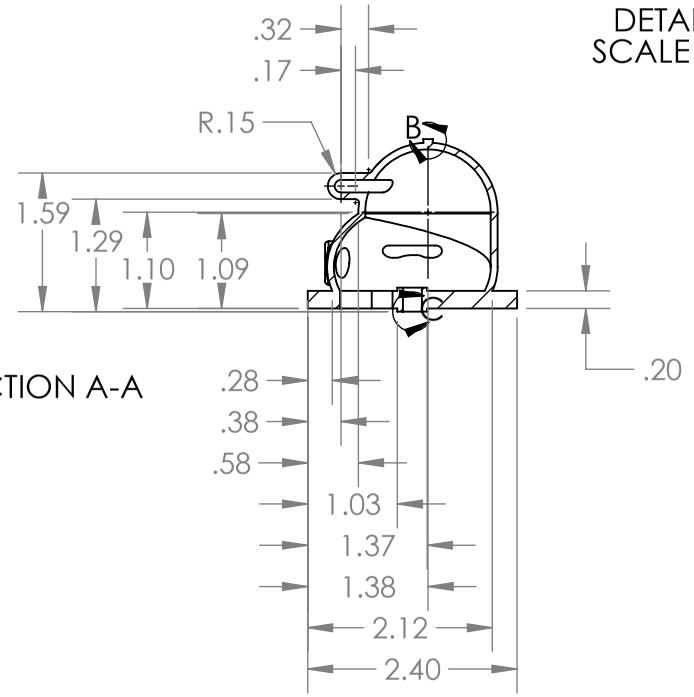

SECTION A-A

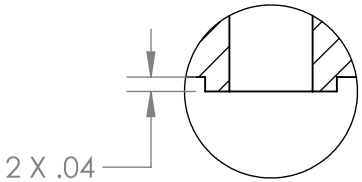

DETAIL C
SCALE 2 : 1

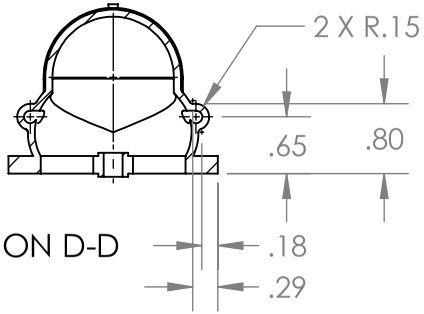

SECTION D-D

FILLET RADIUS 0.039 IN
UNLESS OTHERWISE SPECIFIED

UNIFORM WALL THICKNESS, 0.079 IN
UNLESS OTHERWISE SPECIFIED

	TITLE	DATE	NAME
Georgia Institute of Technology	DRIVEN GEAR SECTION VIEWS	4/15/2026	ANDREA LAN

COURSE	SEMESTER	SECTION	LAB	ACTIVITY	DIMENSIONS ARE IN INCHES ANGLES ARE IN DEGREES	SIZE
ME 1670	SPRING 2026	K			SCALE 1:2.2 SHEET 1 OF 1	A

5 4 3 2 1

SOLIDWORKS Educational Product. For Instructional Use Only.

Appendix

[1] Pokémon. “Psyduck | Pokédex.” *Pokemon.com*, https://www.pokemon.com/us/pokedex/psyduck. Accessed 15 April 2026.

[2] Vincze, Abel. *Gear Generator 1.5*, 2014, https://geargenerator.com/#200,200,100,6,1,3,819.9000000000196,4,1,8,2,4,27,-90,0,0,0,0,0,0,16,4,4,27,-60,0,0,0,0,1,1,12,1,12,20,-60,0,0,0,0,2,0,60,5,12,20,0,1,0,0,0,0,0,3,-506. Accessed 7 March 2026.